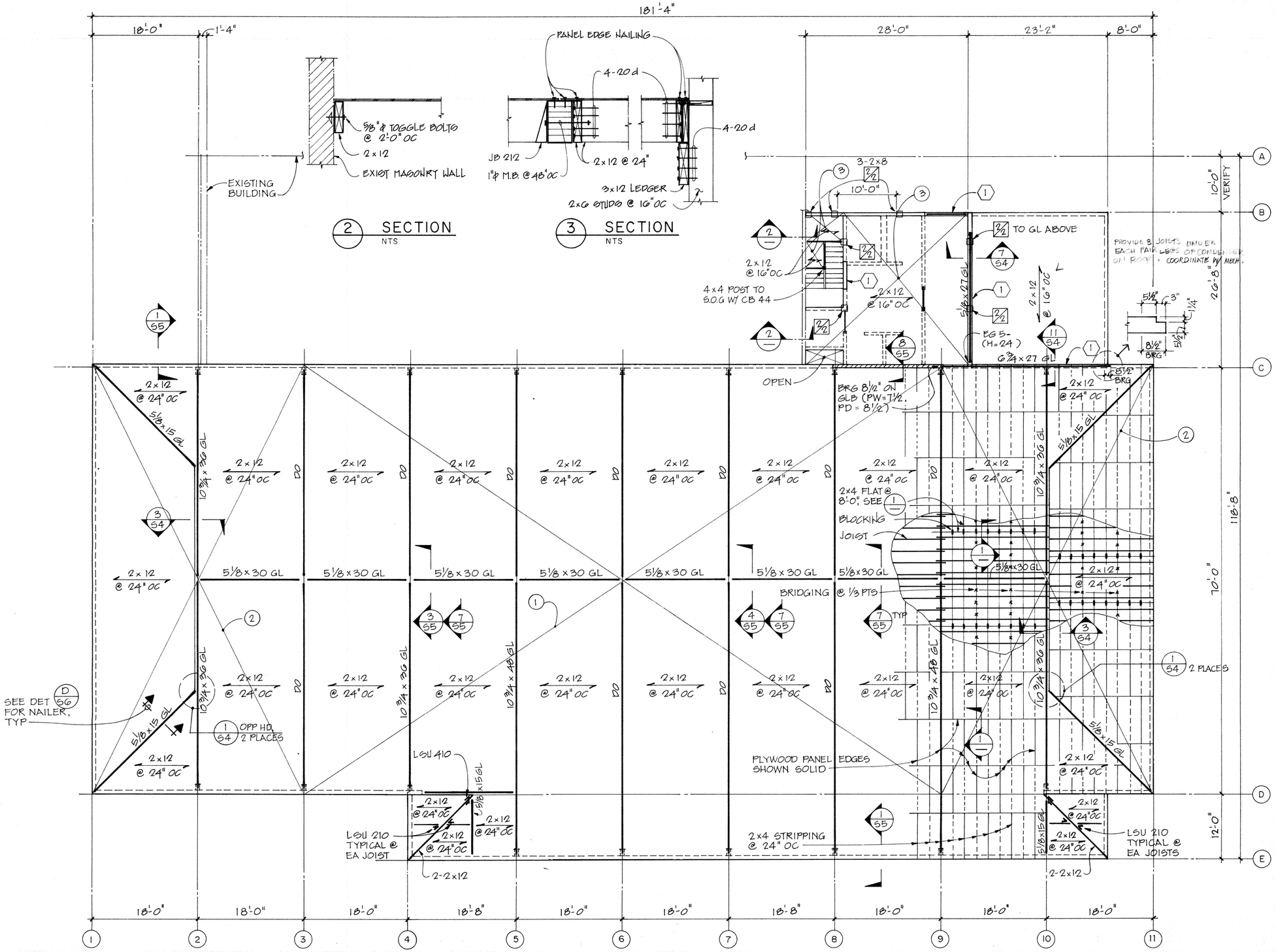

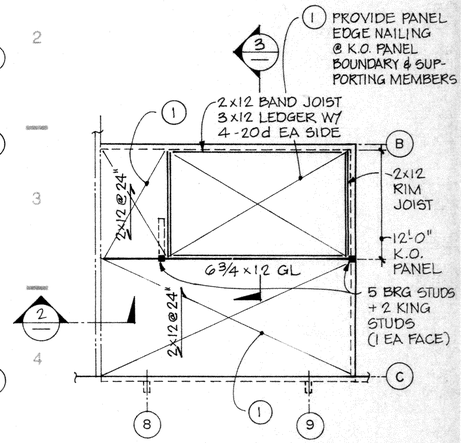

MECHANICAL ROOM ROOF
1/8" = 1'-0"

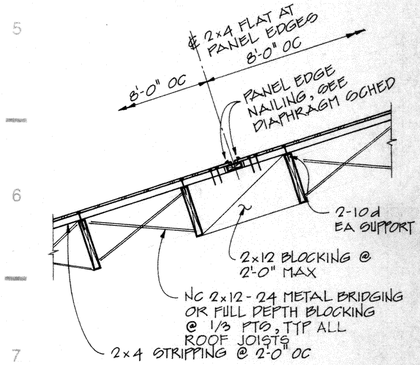

1 SECTION
3/4" = 1'-0"

NORTH
1/8" = 1'-0"

ROOF FRAMING PLAN

REGISTERED ARCHITECTS
STATE OF WASHINGTON

HAL MOE POOL ENCLOSURE	ROOF FRAMING PLAN
THE TSANG PARTNERSHIP, INC. ☐ SEATTLE ☐ TACOMA 1221 SECOND AVENUE SUITE 300 SEATTLE, WA 98101 (206) 343-3044 FAX (206) 684-9599 748 MARKET STREET SUITE 300 TACOMA, WA 98402 (206) 272-9383 FAX (206) 383-8059	DATE: 8-8-89 REVISED: SHEET NO.: S3

© COPYRIGHTS RESERVED